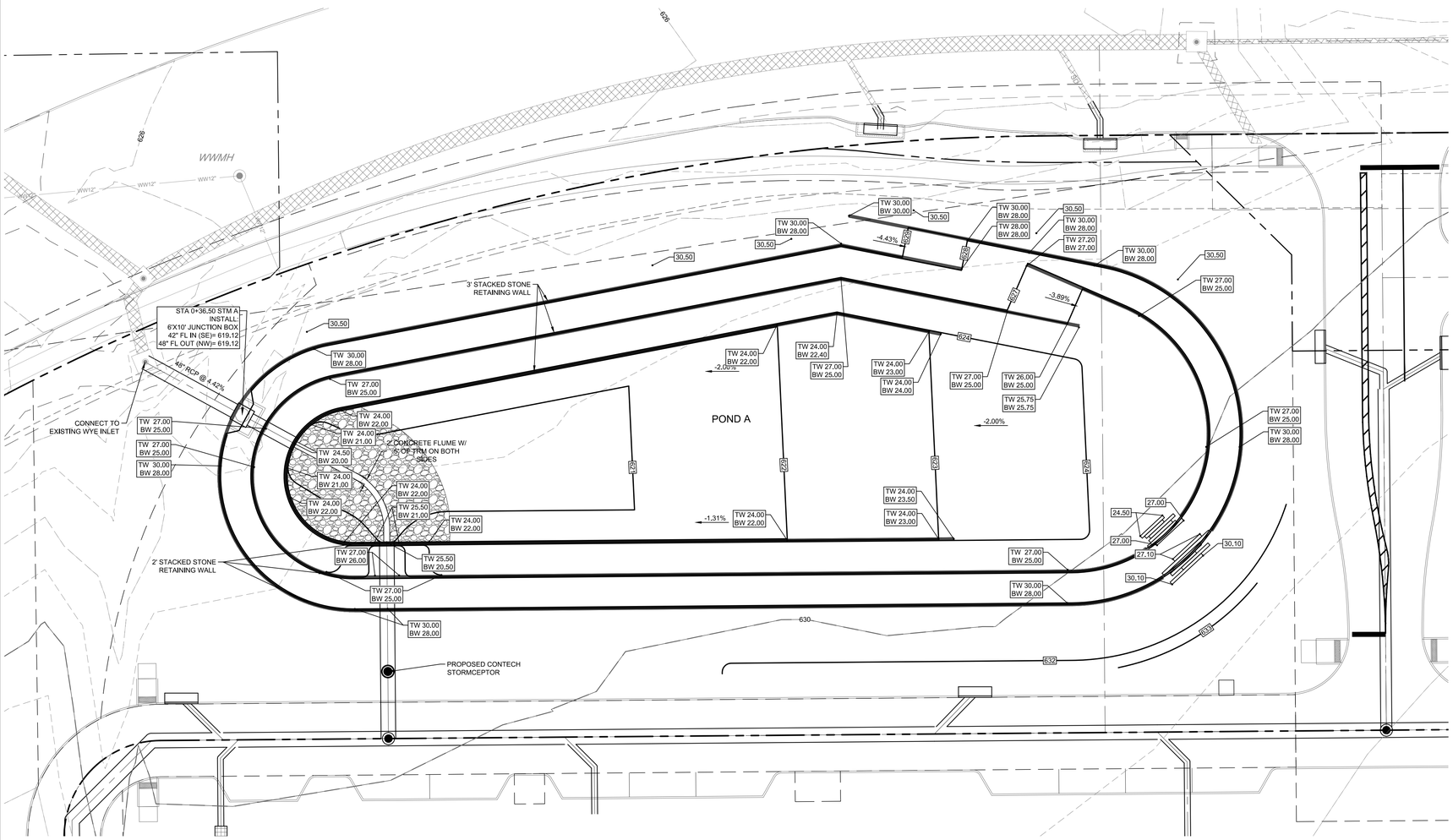

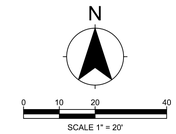

POND A		
Elevation	Area (ac)	Discharge (cfs)
620	0	0
621	0.074	8.65
622	0.204	30.24
623	0.291	42.77
624	0.371	52.38
625	0.563	65.34
626	0.576	99.43
627	0.591	145.46
628	0.768	200.38
629	0.781	262.74
630	0.795	331.65

Frisco 45 - Pond 'A'		
Elevation (ft)	*Cumulative Volume (ft³)*	*Rainfall Event Storage*
628.00	148,496	100-Year Event
627.00	115,042	
626.82	97,792	25-Year Event
626.00	89,298	
625.59	66,865	5-Year Event
625.00	64,207	
624.43	54,145	2-Year Event
624.00	39,683	
623.00	24,786	
622.00	12,110	
621.00	3,223	
620.00	0	

Label	Scenario	Return Event (years)	Hydrograph Volume (ft³)	Peak Flow (ft³/s)
Pond A	Pre-2-YR	2	239,188	60.87
Pond A	Post-2-YR	2	293,333	58.21
Pond A	Pre-5-YR	5	379,582	95.42
Pond A	Post-5-YR	5	434,816	86.63
Pond A	Pre-25-YR	25	598,514	147.56
Pond A	Post-25-YR	25	649,872	142.84
Pond A	Pre-100-YR	100	869,022	210.18
Pond A	Post-100-YR	100	911,624	208.66

Label	Scenario	Return Event (years)	Hydrograph Volume (ft³)	Peak Flow (ft³/s)	Maximum Water Surface Elevation (ft)	Maximum Pond Storage (ft³)
Pond A (IN)	Post-2-YR	2	277,913	91.88	(N/A)	(N/A)
Pond A (OUT)	Post-2-YR	2	277,913	56.00	624.43	39,683
Pond A(IN)	Post-5-YR	5	411,947	133.26	(N/A)	(N/A)
Pond A (OUT)	Post-5-YR	5	411,947	84.08	625.59	66,865
Pond A (IN)	Post-25-YR	25	615,633	194.87	(N/A)	(N/A)
Pond A (OUT)	Post-25-YR	25	615,633	136.68	626.82	97,792
Pond A (IN)	Post-100-YR	100	863,664	268.90	(N/A)	(N/A)
Pond A (OUT)	Post-100-YR	100	863,664	200.19	628.00	131,813

DETENTION POND NOTES

1. DETENTION POND SIZING BASED ON DOWNSTREAM ASSESSMENT PREPARED BY KFM ENGINEERING & DESIGN DATED JULY 17, 2020.
2. PONDS AND COMPOSITE OUTFALL STRUCTURES MODELED IN BENTLEY PONDPACK. RESULTS TABLES ARE PRESENTED ON THIS SHEET FOR REFERENCE.

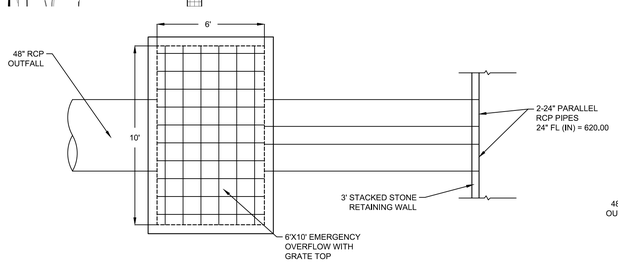

TOP VIEW
N.T.S.

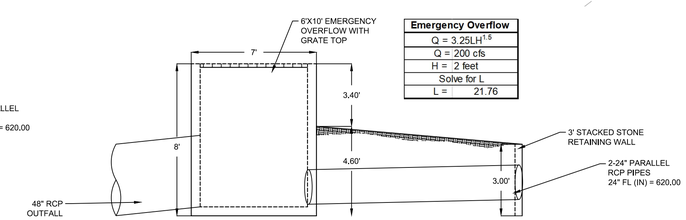

Emergency Overflow
Q = 3.25LH$^{1.5}$
Q = 200 cfs
H = 2 feet
Solve for L
L = 21.76

SIDE VIEW
N.T.S.

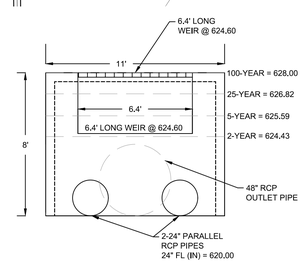

FRONT VIEW
N.T.S.

KFM ENGINEERING & DESIGN
3501 OLYMPUS BLVD, SUITE 100
DALLAS, TEXAS 75019
PHONE: (817) 416-4536
WWW.KFM-LLC.COM
TBPE #: F-20821

ISSUE:	DESCRIPTION:	DATE:

DELTA:	DESCRIPTION:	DATE:

CLIENT
121 SPRING CREEK, LLC

PROJECT
FRISCO 45 INFRASTRUCTURE

SHEET TITLE
DETENTION POND 'A' PLAN

PRELIMINARY
NOT FOR CONSTRUCTION
KFM ENGINEERING & DESIGN
ENGINEER: Joshua A. Millsap
P.E. No.: 100118 DATE: 7/9/21

PROJECT NUMBER: 010021003
DRAWN BY: GW/LL
DESIGNED BY: JDB/TT
CHECKED BY: JAM
DATE: 06/25/21
SHEET:

C4.21

K:\Projects\010021003\cad\sheet\010021003_dp01-jbaran-8-30\2021 8:13 AM

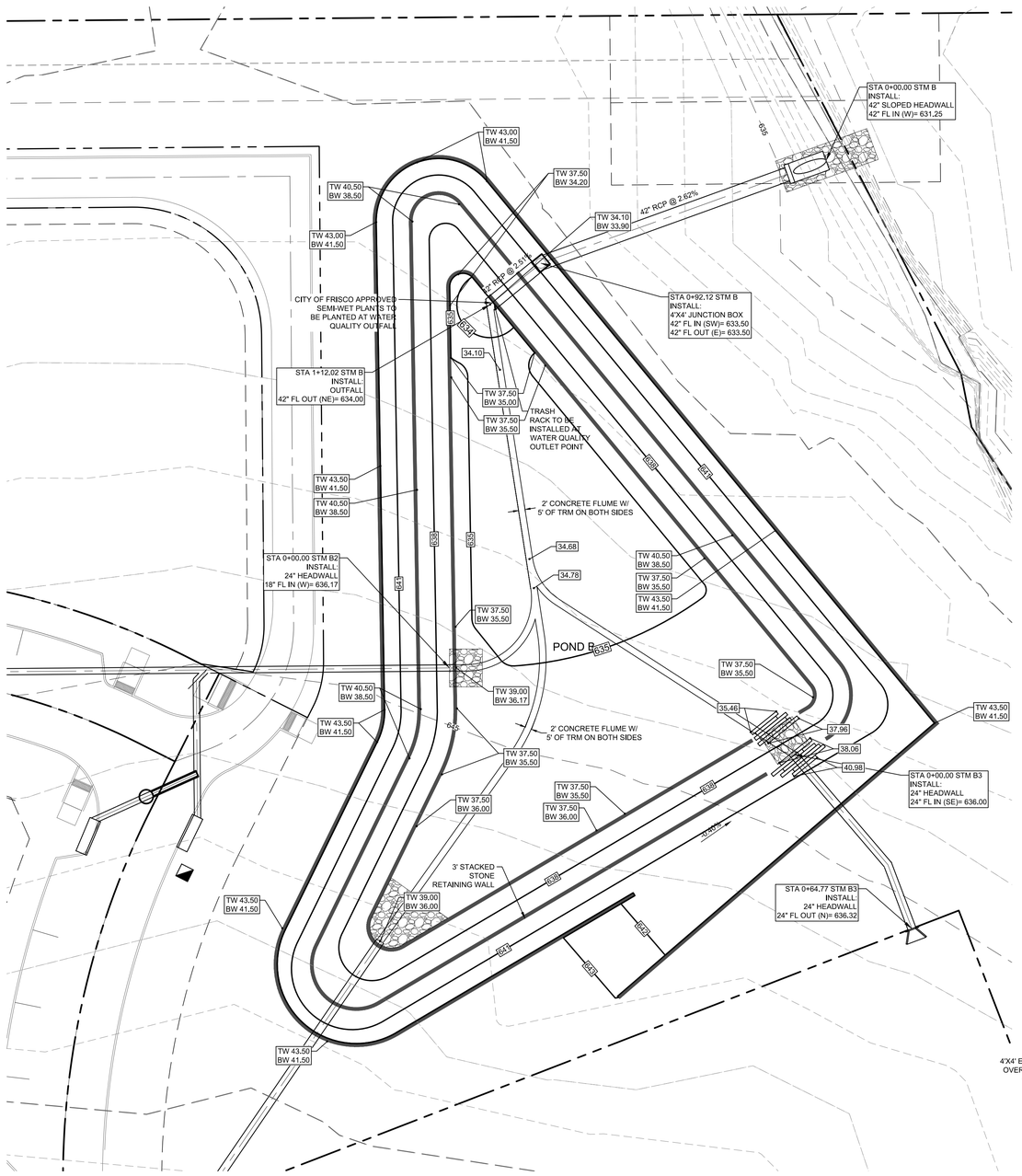

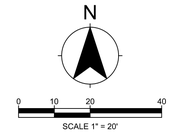

POND B		
Elevation	Area (ac)	Discharge (cfs)
634	0	0
635	0.065	0.75
636	0.161	2.12
637	0.27	3.9
638	0.407	6
639	0.419	9.39
640	0.434	16.98
641	0.562	27.04
642	0.578	38.98
643	0.596	52.53

Frisco 45 - Pond 'B'		
Elevation (ft)	*Cumulative Volume (ft^3)*	*Rainfall Event Storage*
642.00	126,150	100-Year Event
641.00	100,972	
640.47	87,033	25-Year Event
640.00	76,491	
639.21	61,028	5-Year Event
639.00	57,586	
638.12	42,210	2-Year Event
638.00	39,335	
637.00	21,606	
636.00	9,845	
635.00	2,831	
634.00	0	

Label	Scenario	Return Event (years)	Hydrograph Volume (ft^3)	Peak Flow (ft^3/s)
Pond B	Pre-2-YR	2	45,651	11.46
Pond B	Post-2-YR	2	107,201	10.40
Pond B	Pre-5-YR	5	80,630	20.61
Pond B	Post-5-YR	5	165,049	20.32
Pond B	Pre-25-YR	25	138,347	35.31
Pond B	Post-25-YR	25	254,129	34.72
Pond B	Pre-100-YR	100	212,224	53.57
Pond B	Post-100-YR	100	363,334	52.30

Label	Scenario	Return Event (years)	Hydrograph Volume (ft^3)	Peak Flow (ft^3/s)	Maximum Water Surface Elevation (ft)	Maximum Pond Storage (ft^3)
Pond B (IN)	Post-2-YR	2	102,497	36.19	(N/A)	(N/A)
Pond B (OUT)	Post-2-YR	2	90,953	6.44	639.14	50,225
Pond B (IN)	Post-5-YR	5	151,894	52.54	(N/A)	(N/A)
Pond B (OUT)	Post-5-YR	5	151,066	12.63	640.20	70,044
Pond B (IN)	Post-25-YR	25	227,035	76.89	(N/A)	(N/A)
Pond B (OUT)	Post-25-YR	25	211,179	23.92	641.36	96,790
Pond B (IN)	Post-100-YR	100	318,467	106.13	(N/A)	(N/A)
Pond B (OUT)	Post-100-YR	100	315,374	37.93	642.54	126,368

DETENTION POND NOTES

1. DETENTION POND SIZING BASED ON DOWNSTREAM ASSESSMENT PREPARED BY KFM ENGINEERING & DESIGN DATED JULY 17, 2020.
2. PONDS AND COMPOSITE OUTFALL STRUCTURES MODELED IN BENTLEY PONDPACK. RESULTS TABLES ARE PRESENTED ON THIS SHEET FOR REFERENCE.

Water Quality Volume	
R_v = 0.05 + 0.009I	
Impervious Area	78%
R_v =	0.752
$WQ_v = 1.0R_vA/12$	
A =	9.64 acres
WQ_v =	0.604 ac-ft
WQ_v =	26,314 ft^3

Emergency Overflow
$Q = 3.25LH^{1.5}$
Q = 38 cfs
H = 1 foot
Solve for L
L = 11.69

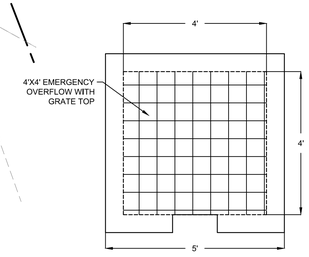

TOP VIEW
N.T.S.

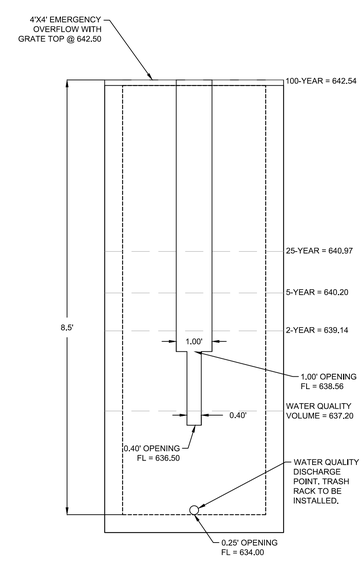

FRONT VIEW
N.T.S.

KFM
ENGINEERING & DESIGN
3501 OLYMPUS BLVD, SUITE 100
DALLAS, TEXAS 75019
PHONE: (817) 416-4536
WWW.KFM-LLC.COM
TBPE #: F-20821

ISSUE:	DESCRIPTION:	DATE:

DELTA:	DESCRIPTION:	DATE:

CLIENT
121 SPRING CREEK, LLC

PROJECT
FRISCO 45 INFRASTRUCTURE

SHEET TITLE
DETENTION POND 'B' PLAN

PRELIMINARY
NOT FOR CONSTRUCTION
KFM ENGINEERING & DESIGN
ENGINEER: Joshua A. Millsap
P.E. No.: 100118 DATE: 7/9/21

PROJECT NUMBER:
010021003

DRAWN BY: GW/LL
DESIGNED BY: JDB/TT
CHECKED BY: JAM

DATE:
06/25/21

SHEET:

C4.22

K:\Projects\010021\003\cad\sheet\010021003_dtp01-Burrer-8-30-2021 8:13 AM

Upstream Station	Downstream Station	Distance between Collection Points	INCREMENTAL DRAINAGE AREA: Area No.	Drainage Area "A" (ac)	Runoff Coeff. "C"	Incremental "CA"	Accumulated "CA"	Time at Upstream Station (min)	Design Storm Frequency (yrs)	Intensity "I" (in/hr)	Storm Water Runoff "Q" (cfs)	Slope of Hydraulic Gradient "S" (ft/ft)	Selected Storm Size	Velocity in Storm Drain Between Collection Points (fps)	Head Loss Coeff. K_j	Velocity Head Loss of Upstream Station (ft)	Flow Time V x 60 (min)	Time of Downstream Station (min)	Hydrraulic Grade Line at Upstream Station (ft)	Hydraulic Grade Line at Downstream Station (ft)	Remarks
1	2	3	4	5	6	7	8	9	10	11	12	13	14	15	16	17	18	19	20	21	22
STORM LINE A1																					
16+17.49	15+93.49	24.00					0.00	0.00	100	7.88	0.00	0.000	18	0.00	1.25	0.00	∞	0.00	647.83	647.83	NO FLOW IN INTERIM
15+93.49	15+85.00	8.49					0.00	0.00	101	7.88	0.00	0.000	18	0.00	0.35	0.00	∞	1.00	647.83	647.83	NO FLOW IN INTERIM
15+85.00	15+51.06	33.94					0.00	0.00	102	7.88	0.00	0.000	18	0.00	0.75	0.00	∞	2.00	647.83	647.83	NO FLOW IN INTERIM
15+51.06	15+08.93	42.13					0.00	0.00	103	7.88	0.00	0.000	18	0.00	0.00	0.00	∞	3.00	647.83	647.83	NO FLOW IN INTERIM
15+08.93	14+43.24	65.69	LAT A1-17	1.41	0.90	1.27	1.27	12.10	104	7.88	10.08	0.009	18	5.70	0.75	0.38	0.00	4.00	647.45	646.84	
14+43.24	13+96.46	46.78					1.27	12.29	105	7.88	10.08	0.009	18	5.70	0.00	0.00	0.00	5.00	646.84	646.45	
13+96.46	13+90.28	6.18	LAT A1-16				1.27	12.41	106	7.88	11.44	0.012	18	6.47	1.00	0.00	0.00	6.00	646.45	646.38	
13+90.28	13+35.71	54.57	LAT A1-15				1.27	12.43	107	7.88	12.72	0.015	18	7.20	0.35	0.28	0.00	7.00	646.10	645.30	
13+35.71	12+58.81	76.90	LAT A1-19	0.30	0.90	0.27	1.54	12.55	108	7.88	27.31	0.015	24	8.69	0.00	0.00	0.01	8.00	645.30	644.09	
12+58.81	12+32.14	26.67					1.54	12.71	109	7.88	27.31	0.015	24	8.69	0.35	0.41	0.00	9.00	643.68	642.25	
12+32.14	11+67.20	64.94	LAT A1-14	3.12	2.70	2.81	4.35	13.74	110	7.88	55.08	0.007	36	7.79	0.25	0.24	0.00	10.00	642.02	641.57	
11+67.20	11+35.50	31.70					4.35	13.87	111	7.88	55.08	0.007	36	7.79	0.05	0.05	0.00	11.00	641.53	641.31	
11+35.50	9+63.89	171.61					4.35	13.94	112	7.88	55.08	0.007	36	7.79	0.05	0.05	0.00	12.00	641.26	640.15	
9+63.89	9+58.89	5.00					4.35	14.29	113	7.88	55.08	0.007	36	7.79	1.00	0.00	0.00	13.00	640.15	640.12	
9+58.89	9+20.64	38.25	LAT A1-12	2.54	0.90	2.29	6.63	14.30	114	7.88	55.08	0.007	36	7.79	0.35	0.33	0.00	14.00	639.79	639.53	
9+20.64	8+56.37	64.27	LAT A1-11	2.60	0.35	0.91	7.54	14.38	115	7.88	73.66	0.012	36	10.42	0.35	0.59	0.00	15.00	638.94	638.15	
8+56.37	7+77.07	79.30					7.54	14.49	116	7.88	73.66	0.012	36	10.42	0.35	0.59	0.00	16.00	637.56	636.59	
7+77.07	7+64.55	12.52					7.54	14.61	117	7.88	73.66	0.012	36	10.42	1.00	0.00	0.00	17.00	636.59	636.44	
7+64.55	6+78.61	85.94					7.54	14.63	118	7.88	73.66	0.012	36	10.42	0.75	1.27	0.00	18.00	635.17	635.08	
6+78.61	6+72.34	6.27					7.54	14.64	119	7.88	73.66	0.005	42	7.66	1.00	0.00	0.00	19.00	635.08	634.79	
6+72.34	6+58.34	14.00	LAT A1-7	2.85	0.90	2.57	10.11	14.77	120	7.88	73.66	0.003	48	5.86	1.00	0.00	0.00	20.00	634.79	634.73	
6+58.34	6+51.23	7.11					10.11	14.83	121	7.88	94.04	0.004	48	7.48	0.75	0.65	0.00	21.00	634.08	634.03	
6+51.23	6+46.87	4.36	LAT A1-6	0.11	0.90	0.10	10.21	14.85	122	7.88	94.04	0.004	48	7.48	1.00	0.00	0.00	22.00	634.03	634.00	
6+46.87	6+17.96	28.91	LAT A1-5	2.87	0.70	2.01	12.22	14.87	123	7.88	94.61	0.004	48	7.53	1.00	0.00	0.00	23.00	634.00	633.98	
6+17.96	5+61.46	56.50	LAT A1-4	0.32	0.90	0.29	12.50	14.88	124	7.88	95.39	0.004	48	7.59	0.75	0.67	0.00	24.00	633.31	633.18	
5+61.46	3+94.96	166.50	LAT A1-3	2.87	0.90	2.58	15.09	14.94	125	7.88	100.47	0.005	48	8.00	0.25	0.25	0.00	25.00	632.93	632.65	
3+94.96	2+45.50	149.46	LAT A1-2A	0.27	0.90	0.24	15.33	15.06	126	7.88	100.47	0.005	48	8.00	0.00	0.00	0.01	26.00	632.65	631.84	
2+45.50	1+23.21	122.29	LAT A1-1	3.14	0.30	0.41	15.74	15.41	127	7.88	121.92	0.007	48	9.70	0.25	0.37	0.00	27.00	631.47	630.93	
1+23.21	0+64.97	58.24					15.74	15.54	128	7.88	133.21	0.009	48	10.60	1.00	0.00	0.00	28.00	630.93	630.29	
0+64.97	0+42.77	22.20					15.74	15.65	128	7.88	135.14	0.009	48	10.75	0.75	1.35	0.00	28.00	628.94	627.86	
0+42.77	0+00.00	42.77					15.74	15.84	128	7.88	135.14	0.009	48	10.75	1.00	0.00	0.00	28.00	627.86	627.35	
0+42.77	0+00.00	42.77					15.74	15.93	128	7.88	192.19	0.018	48	15.29	0.25	0.91	0.00	28.00	626.44	626.04	
0+42.77	0+00.00	42.77					15.74	15.96	128	7.88	192.19	0.018	48	15.29	0.25	0.91	0.00	28.00	625.13	624.32	
STORM LINE A2																					
6+64.62	6+25.26	39.36	A22	1.49	0.90	1.34	1.34	12.00	100	7.88	18.16	0.030	18	10.28	1.25	2.05	0.00	12.00	632.09	630.93	
6+25.26	6+17.14	8.12					1.34	12.06	100	7.88	18.16	0.006	24	5.78	0.35	0.18	0.00	12.06	630.75	630.69	
6+17.14	5+80.07	37.07					1.34	12.09	100	7.88	18.16	0.006	24	5.78	0.42	0.22	0.00	12.09	630.47	630.24	
5+80.07	4+33.71	146.36	LAT A2-7	0.26	0.90	0.23	1.58	12.24	100	7.88	20.02	0.008	24	6.37	0.75	0.47	0.01	12.25	629.76	628.62	
4+33.71	4+28.75	4.96	LAT A2-6	2.54	0.90	2.29	3.86	12.63	100	7.88	20.02	0.001	36	2.83	1.00	0.00	0.00	12.63	628.62	628.61	
4+28.75	4+22.62	6.13	LAT A2-5	0.13	0.90	0.12	3.98	12.65	100	7.88	20.95	0.001	36	2.96	1.00	0.00	0.00	12.65	628.61	628.61	
4+22.62	4+09.34	13.28	LAT A2-4	0.21	0.90	0.19	4.17	12.69	100	7.88	31.60	0.002	36	4.47	0.75	0.23	0.00	12.69	628.37	628.34	
4+09.34	3+49.67	59.67					4.17	12.74	100	7.88	33.10	0.002	36	4.68	0.25	0.09	0.00	12.74	628.26	628.11	
3+49.67	3+32.36	17.31					4.17	12.95	100	7.88	33.10	0.002	36	4.68	0.35	0.12	0.00	12.95	627.99	627.97	
3+32.36	1+91.94	140.42					4.17	12.98	100	7.88	33.10	0.001	48	2.63	1.00	0.00	0.00	12.98	627.97	627.97	
1+91.94	1+15.56	76.38					4.17	13.04	100	7.88	33.10	0.001	48	2.63	1.00	0.00	0.01	13.04	627.97	627.87	
1+15.56	0+78.27	37.29					4.17	14.17	100	7.88	33.10	0.001	48	2.63	0.35	0.04	0.00	14.17	627.83	627.81	
0+78.27	0+54.56	23.71					4.17	14.40	100	7.88	33.10	0.001	48	2.63	0.35	0.04	0.00	14.40	627.78	627.77	
0+54.56	0+46.91	7.65	LAT A2-2	0.48	0.90	0.43	4.60	14.52	100	7.88	36.53	0.001	48	2.91	0.75	0.10	0.00	14.52	627.67	627.66	
0+46.91	0+00.00	46.91	LAT A2-1	2.11	0.90	1.90	6.50	14.55	100	7.88	57.05	0.002	48	4.54	0.75	0.24	0.00	14.55	627.42	627.35	
STORM LINE B1																					
3+26.00	3+17.24	8.76	B6	0.25	0.90	0.23	0.23	10.02	100	7.88	1.79	0.000	18	1.01	0.50	0.01	0.00	10.02	647.53	647.53	
3+17.24	3+10.19	7.05					0.23	10.17	100	7.88	1.79	0.000	18	1.01	0.35	0.01	0.00	10.17	647.52	647.52	
3+10.19	3+02.51	7.68					0.23	10.28	100	7.88	1.79	0.000	18	1.01	0.35	0.01	0.00	10.28	647.52	647.51	
3+02.51	2+11.49	91.02	LAT B1-2	1.83	0.90	1.65	1.87	10.41	100	7.88	14.87	0.020	18	8.41	0.75	0.83	0.00	10.41	646.69	644.86	
2+11.49	1+61.04	50.45	LAT B1-1	2.66	0.90	2.39	4.27	10.59	100	7.88	37.53	0.028	24	11.95	0.00	0.00	0.00	10.59	644.86	643.47	
1+61.04	0+00.00	161.04					4.27	10.66	100	7.88	37.53	0.028	24	11.95	0.48	1.06	0.00	10.66	642.41	637.94	
STORM LINE B2																					
3+24.52	3+06.21	18.31	B3	0.71	0.90	0.64	0.64	10.02	100	7.88	5.08	0.003	18	4.53	1.25	0.24	0.00	10.02	638.93	638.90	
3+06.21	0+73.88	232.33	LAT B2-2	0.17	0.90	0.15	0.79	10.10	100	7.88	6.22	0.004	18	4.70	0.42	0.14	0.01	10.12	638.76	638.04	
0+73.88	0+00.00	73.88	LAT B2-1	0.49	0.90	0.44	1.23	10.93	100	7.88	8.15	0.006	18	4.61	0.50	0.19	0.00	10.93	637.85	637.28	
STORM LINE C1																					
4+71.39	4+62.39	9.00	C2	0.43	0.90	0.39	0.39	12.00	100	7.88	3.07	0.000	24	3.94	1.00	0.00	0.00	12.00	636.42	636.42	
4+62.39	3+43.72	118.67					0.39	12.04	100	7.88	3.07	0.000	24	3.94	1.00	0.00	0.01	12.05	636.42	636.41	
3+43.72	2+73.04	70.68					0.39	12.54	100	7.88	3.07	0.000	24	0.98	1.00	0.00	0.00	12.55	636.41	636.39	
2+73.04	2+63.15	9.89					0.39	13.75	100	7.88	4.86	0.000	24	1.55	1.00	0.00	0.00	13.75	636.39	636.39	
2+63.15	2+22.20	40.95	LAT C1-2	0.25	0.90	0.23	0.61	13.85	100	7.88	4.86	0.000	24	1.55	1.00	0.00	0.00	13.85	636.39	636.37	
2+22.20	0+58.95	163.25					0.61	14.29	100	7.88	4.86	0.000	24	1.55	0.05	0.00	0.01	14.30	636.37	636.29	
0+58.95	0+20.00	38.95	LAT C1-1	2.53	0.90	2.28	2.89	16.05	100	7.88	22.95	0.010	24	7.30	0.35	0.29	0.00	16.05	636.00	635.60	
0+20.00	0+00.00	20.00					2.89	16.14	100	7.88	22.95	0.009	24	7.30	1.25	1.05	0.00	16.14	634.55	634.21	
STORM LAT A1-1																					
0+19.33	0+00.00	19.33	A1	1.37	0.30	0.41	0.41	12.00	100	7.88	1.93	0.000	24	0.61	1.25	0.01	0.00	12.00	629.07	629.06	
STORM LAT A1-2A																					
1+56.89	1+27.57	29.32	A2	0.27	0.90	0.24	0.24	12.00	100	7.88	0.93	0.000	24	0.30	1.25	0.00	0.00	12.00	630.76	630.76	
1+27.57	1+12.85	14.72					0.24	13.26	100	7.88	0.93	0.000	24	0.30	0.75	0.00	0.00	13.27	630.75	630.75	
1+12.85	0+00.00	112.85	A1-2B	2.87	0.90	2.58	2.83	13.58	100	7.88	21.45	0.001	36	3.03	0.35	0.05	0.00	13.59	630.70	630.59	
STORM LAT A1-2B								0.00	100	0.00	0.00	0.000	0	0.00	0.00	0.00	0.00	0.00	0.00	0.00	
0+23.74	0+00.00	23.74	A3,A7	2.87	0.90	2.58	2.58	12.00	100	7.88	20.52	0.001	36	2.90	1.25	0.16	0.00	12.00	630.64	630.63	
STORM LAT A1-3																					
0+32.99	0+08.49	24.50					0.00	0.00	100	7.88	0.00	0.000	18	0.00	1.25	0.00	∞	0.00	631.81	631.81	NO FLOW IN INTERIM
0+08.49	0+00.00	8.49					0.00	0.00	100	7.88	0.00	0.000	18	0.00	0.35	0.00	∞	0.00	631.81	631.81	NO FLOW IN INTERIM
STORM LAT A1-4A																					
4+20.44	4+01.03	19.41					0.00	0.00	100	7.88	0.00	0.000	18	0.00	1.00	0.00	∞	0.00	630.00	630.00	NO FLOW IN INTERIM
4+01.03	3+92.50	8.53					0.00	0.00	100	7.88	0.00	0.000	18	0.00	1.00	0.00	∞	0.00	630.00	630.00	NO FLOW IN INTERIM
3+92.50	1+80.90	211.60					0.00	0.00	100	7.88	0.00	0.000	18	0.00	1.00	0.00	∞	0.00	633.21	633.21	NO FLOW IN INTERIM
1+80.90	0+43.07	137.83					0.00	0.00	100	7.88	0.00	0.000	18	0.00	1.00	0.00	∞	0.00	633.21	633.21	NO FLOW IN INTERIM
0+43.07	0+00.00	43.07	LAT A1-4B, A1-4	0.65	0.90	0.59	0.59	12.19	100	7.88	5.08	0.001	24	1.62	0.42	0.02	0.00	12.19	633.19	633.18	
STORM LAT A1-4B																					
0+15.62	0+00.00	15.62	A9	0.33	0.90	0.30	0.30	12.00	182	7.88	2.43	0.001	18	1.38	1.25	0.04	0.00	12.00	632.09	632.08	
STORM LAT A1-4C																					
0+15.44	0+00.00	15.44	A8	0.32	0.90	0.29	0.29	12.00	182	7.88	2.65	0.001	18	1.50	1.25	0.04	0.00	12.00	632.38	632.37	
STORM LAT A1-5																					
0+15.84	0+00.00	15.84	A4	2.87	0.70	2.01	2.01	12.00	100	7.88	0.79	0.000	18	0.44	1.25	0.00	0.00	12.00	633.49	633.49	
STORM LAT A1-6																					
0+14.31	0+00.00	14.31	A5	0.11	0.90	0.10	0.10	12.00	100	7.88	0.57	0.000	18	0.32	1.25	0.00	0.00	12.00	633.53	633.53	
STORM LAT A1-7																					
0+33.10	0+08.48	24.62	A10	2.85	0.90	2.57	2.57	12.00	100	7.88	22.95	0.048	18	12.99	1.25	3.28	0.00	12.00	637.32	636.14	
0+08.48	0+00.00	8.48					2.57	12.03	100	7.88	22.95	0.048	18	12.99	0.35	0.92	0.00	12.03	635.23	634.82	
STORM LAT A1-8																					
0+33.11	0+08.50	24.61					0.00	0.00	100	7.88	0.00	0.000	24	0.00	1.25	0.00	∞	0.00	638.49	638.49	NO FLOW IN INTERIM
0+08.50	0+00.00	8.50					0.00	0.00	100	7.88	0.00	0.000	24	0.00	0.35	0.00	∞	0.00	638.49	638.49	NO FLOW IN INTERIM

Upstream Station	Downstream Station	Distance between Collection Points	INCREMENTAL DRAINAGE AREA: Area No.	Drainage Area "A" (ac)	Runoff Coeff. "C"	Incremental "CA"	Accumulated "CA"	Time at Upstream Station (min)	Design Storm Frequency (yrs)	Intensity "I" (in/hr)	Storm Water Runoff "Q" (cfs)	Slope of Hydraulic Gradient "S" (ft/ft)	Selected Storm Size	Velocity in Storm Drain Between Collection Points (fps)	Head Loss Coeff. K_j	Velocity Head Loss of Upstream Station (ft)	Flow Time V x 60 (min)	Time of Downstream Station (min)	Hydrraulic Grade Line at Upstream Station (ft)	Hydraulic Grade Line at Downstream Station (ft)	Remarks
STORM LAT A1-8																					
0+33.11	0+08.50	24.61					0.00	0.00	100	7.88	0.00	0.000	24	0.00	1.25	0.00	∞	0.00	638.49	638.49	NO FLOW IN INTERIM
0+08.50	0+00.00	8.50					0.00	0.00	100	7.88	0.00	0.000	24	0.00	0.35	0.00	∞	0.00	638.49	638.49	NO FLOW IN INTERIM
STORM LAT A1-9																					
0+33.10	0+08.48	24.62					0.00	0.00	100	7.88	0.00	0.000	18	0.00	1.25	0.00	∞	0.00	636.69	636.69	NO FLOW IN INTERIM
0+08.48	0+00.00	8.48					0.00	0.00	100	7.88	0.00	0.000	12	0.00	0.35	0.00	∞	0.00	636.69	636.69	NO FLOW IN INTERIM
STORM LAT A1-10																					
0+33.44	0+09.03	24.41					0.00	0.00	100	7.88	0.00	0.000	18	0.00	1.25	0.00	∞	0.00	638.18	638.18	NO FLOW IN INTERIM
0+09.03	0+00.00	9.03					0.00	0.00	100	7.88	0.00	0.000	18	0.00	0.35	0.00	∞	0.00	638.18	638.18	NO FLOW IN INTERIM
STORM LAT A-11																					
0+42.34	0+08.46	33.88	A12	2.60	0.35	0.91	0.91	12.00	100	7.88	18.59	0.007	24	5.92	1.25	0.68	0.00	12.00	639.97	639.74	
0+08.46	0+00.00	8.46					0.91	12.10	100	7.88	18.59	0.007	24	5.92	0.35	0.19	0.00	12.10	639.55	639.49	
STORM LAT A1-12																					
0+32.94	0+08.47	24.47					0.00	0.00	100	7.88	0.00	0.000	18	0.00	1.25	0.00	∞	0.00	640.55	640.55	NO FLOW IN INTERIM
0+08.47	0+00.00	8.47					0.00	0.00	100	7.88	0.00	0.000	18	0.00	0.35	0.00	∞	0.00	640.55	640.55	NO FLOW IN INTERIM
STORM LAT A1-13																					
2+42.94	1+79.88	63.06	A25	0.26	0.90	0.23	0.23	12.00	100	7.88	1.89	0.000	18	1.07	1.00	0.00	0.00	12.00	643.56	643.55	
1+79.88	1+22.65	57.23					0.23	12.27	100	7.88	1.89	0.000	18	1.07	1.00	0.00	0.00	12.28	643.55	643.54	
1+22.65	1+00.11	22.54					0.23	12.57	100	7.88	9.75	0.009	18	5.52	1.00	0.00	0.00	12.58	643.54	642.86	
1+00.11	0+96.82	3.29					0.23	13.31	100	7.88	27.76	0.002	36	3.93	1.00	0.00	0.00	13.31	642.86	642.85	
0+96.82	0+00.00	96.82					0.23	13.32	100	7.88	27.76	0.002	36	3.93	1.00	0.00	0.00	13.33	642.85	642.68	
STORM LAT A1-13B																					
5+04.25	4+09.75	246.02	A14	2.52	0.90	2.27	2.27	12.00	100	7.88	18.01	0.006	24	5.73	1.00	0.00	0.00	12.00	643.21	642.95	
4+09.75	3+97.97	11.78					2.27	12.12	101	7.88	18.01	0.006	24	5.73	1.00	0.00	0.00	12.12	642.95	642.88	
3+97.97	3+50.88	47.09					2.27	12.15	101	7.88	18.01	0.006	24	5.73	1.00	0.00	0.00	12.16	642.88	642.70	
3+50.88	1+51.95	246.02					2.27	12.24	102	7.88	18.01	0.001	36	2.55	1.00	0.00	0.01	12.25	642.70	642.54	
1+51.95	1+32.03	19.92					2.27	13.66	103	7.88	18.01	0.001	36	2.55	1.00	0.00	0.00	13.66	642.54	642.52	
1+32.03	0+06.68	125.35					2.27	13.79	101	7.88	18.01	0.001	36	2.55	1.00	0.00	0.01	13.80	642.52	642.43	
0+06.68	0+00.00	6.68					2.27	14.61	105	7.88	18.01	0.001	36	2.55	1.00	0.00	0.00	14.61	642.43	642.43	
STORM LAT A1-13C																					
0+19.53	0+00.00	19.53	A26	1.10	0.90	0.99	0.99	12.00	100	7.88	1.62	0.000	18	0.91	1.00	0.00	0.00	12.00	641.72	641.72	
STORM LAT A1-14																					
2+98.27	2+14.03	84.24	A14	2.52	0.90	2.27	2.27	12.00	100	7.88	10.30	0.027	18	13.31	1.00	0.00	0.00	12.00	652.81	650.48	
2+14.03	0+64.87	149.16					2.27	12.28	100	7.88	10.30	0.010	18	5.83	1.00	0.00	0.00	12.28	646.64	646.57	
0+64.87	0+53.95	10.92					2.27	12.30	100	7.88	10.30	0.010	18	5.83	1.00	0.00	0.00	12.30	646.57	646.46	
0+53.95	0+43.54	10.41					2.27	12.34	100	7.88	10.30	0.010	18	5.83	1.00	0.00	0.00	12.34	646.46	646.36	
0+43.54	0+36.78	6.76	LAT A1-19	0.30	0.90	0.27	2.54	12.37	100	7.88	12.44	0.014	18	7.04	1.00	0.00	0.00	12.37	646.36	646.27	
0+36.78	0+32.89	3.89	LAT A1-18	0.30	0.90	0.27	2.81	12.38	100	7.88	14.59	0.019	18	8.25	0.25	0.26	0.00	12.38	646.00	645.93	
0+32.89	0+00.00	32.89					2.81	12.39	100	7.88	14.59	0.019	18	8.25	1.00	0.00	0.00	12.39	645.93	645.30	
STORM LAT A1-15																					
0+19.38	0+00.00	19.38	A13	0.18	0.90	0.16	0.16	12.00	100	7.88	1.29	0.000	18	0.73	1.25	0.01	0.00	12.00	647.42	647.41	
STORM LAT A1-16																					
0+15.53	0+00.00	15.53	A17	0.19	0.90	0.17	0.17	12.00	100	7.88	1.36	0.001	12	1.73	1.25	0.06	0.00	12.00	647.48	647.46	
STORM LAT A1-17																					
0+32.87	0+10.13	22.74	A18	1.41	0.90	1.27	1.27	12.00	100	7.88	10.08	0.009	18	5.70	1.25	0.63	0.00	12.00	648.74	648.53	
0+10.13	0+00.00	10.13					1.27	12.07	100	7.88	10.08	0.009	18	5.70	0.35	0.18	0.00	12.07	648.35	648.26	
STORM LAT A1-18																					
0+27.19	0+00.00	27.19	A16	0.30	0.90	0.27	0.27	12.00	100	7.88	2.14	0.000	18	1.21	1.25	0.03	0.00	12.00	647.71	647.70	
STORM LAT A1-19																					
0+16.56	0+00.00	16.56	A15	0.30	0.90	0.27	0.27	12.00	100	7.88	2.14	0.000	18	1.21	1.25	0.03	0.00	12.00	647.80	647.79	
STORM LAT A1-20																					
0+23.04	0+00.00	23.04					0.00	0.00	100	7.88	0.00	0.000	18	0.00	1.00	0.00	∞	0.00	648.47	648.47	NO FLOW IN INTERIM
STORM LAT A1-21																					
0+33.00	0+00.00	33.00					0.00	0.00	100	7.88	0.00	0.000	18	0.00	1.00	0.00	∞	0.00	648.57	648.57	NO FLOW IN INTERIM
STORM LAT A1-22																					
0+29.49	0+13.91	15.58					0.00	0.00	100	7.88	0.00	0.000	18	0.00	1.00	0.00	∞	0.00	627.02	627.02	NO FLOW IN INTERIM
0+13.91	0+00.00	13.91					0.00	0.00	100	7.88	0.00	0.000	18	0.00	1.00	0.00	∞	0.00	627.02	627.02	NO FLOW IN INTERIM
STORM LAT A1-23																					
0+41.52	0+13.91	27.61	A6	2.87	0.90	2.58	2.58	12.00	100	7.88	11.30	0.012	18	6.39	1.00	0.00	0.00	0.00	630.32	630.00	
0+13.91	0+00.00	13.91					2.58	12.07	100	7.88	11.30	0.012	18	6.39	1.00	0.00	0.00	0.00	630.24	630.08	
STORM LAT A1-24																					
0+19.99	0+08.53	11.46						0.00	100	7.88	0.00	0.000	18	0.00	1.00	0.00	∞	0.00	630.00	630.00	NO FLOW IN INTERIM
0+08.53	0+00.00	8.53						0.00	100	7.88	0.00	0.000	18	0.00	1.00	0.00	∞	0.00	632.37	632.37	NO FLOW IN INTERIM
STORM LAT A1-25																					
0+41.45	0+15.09	26.36	A26	1.10	0.90	0.99		10.02	100	7.88	15.01	0.004	24	4.78	1.00	0.00	0.00	0.00	633.40	633.28	
0+15.09	0+00.00	15.09						10.11	100	7.88	15.01	0.004	24	4.78	1.00	0.00	0.00	0.00	633.28	633.21	
STORM LAT A2-1																					
0+32.99	0+08.49	24.50	A20	2.11	0.90	1.90	1.90	12.00	100	7.88	20.52	0.038	18	11.61	1.25	2.62	0.00	12.00	628.81	627.88	
0+08.49	0+00.00	8.49					1.90	12.04	100	7.88	20.52	0.038	18	11.61	0.35	0.73	0.00	12.04	627.15	626.82	
STORM LAT A2-2																					
0+19.56	0+00.00	19.56	A19	0.48	0.90	0.43	0.43	12.00	100	7.88	3.43	0.001	18	1.94	1.25	0.07	0.00	12.00	626.55	626.53	
STORM LAT A2-3																					
0+53.46	0+14.02	39.44					0.00	0.00	100	7.88	0.00	0.000	18	0.00	1.25	0.00	∞	0.00	626.67	626.67	NO FLOW IN INTERIM
0+14.02	0+00.00	14.02					0.00	0.00	100	7.88	0.00	0.000	18	0.00	0.35	0.00	∞	0.00	626.67	626.67	NO FLOW IN INTERIM
STORM LAT A2-4																					
0+41.76	0+00.00	41.76	A21	0.21	0.90	0.19	0.19	12.00	100	7.88	1.50	0.002	12	1.91	1.25	0.07	0.00	12.00	627.20	627.12	
STORM LAT A2-5																					
0+19.72	0+03.87	15.85	A23	0.13	0.90	0.12	0.12	12.00	100	7.88	0.93	0.001	12	1.18	1.25	0.03	0.00	12.00	627.30	627.28	
0+03.87	0+00.00	3.87					0.12	12.22	100	7.88	0.93	0.001	12	1.18	1.00	0.00	0.00	12.22	627.28	627.28	
STORM LAT A2-6																					
0+44.19	0+19.65	24.54	A11	2.54	0.90	2.29	2.29	0.00	100	7.88	0.00	0.000	24	0.00	1.25	0.00	∞	0.00	627.27	627.27	NO FLOW IN INTERIM
0+19.65	0+00.00	19.65					2.29	0.00	100	7.88	0.00	0.000	24	0.00	0.35	0.00	∞	0.00	627.27	627.27	NO FLOW IN INTERIM
STORM LAT A2-7																					
0+19.48	0+00.00	19.48	A24	0.26	0.90	0.23	0.23	12.00	100	7.88	1.86	0.000	18	13.46	1.25	0.02	0.00	12.00	629.60	629.60	
STORM LAT B1-1																					
0+37.12	0+00.00	37.12	B8	2.66	0.90	2.39	2.39	10.02	100	7.88	22.66	0.010	24	7.21	1.25	1.01	0.00	10.02	645.09	644.86	
STORM LAT B1-2																					
0+19.49	0+00.00	19.49	B7	1.83	0.90	1.65	1.65	10.02	100	7.88	13.08	0.016	18	7.40	1.25	1.06	0.00	10.02	647.86	647.51	
STORM LAT B2-1A																					
0+51.30	0+32.71	18.59	B5	0.07	0.90	0.06	0.06	10.02	100	7.88	0.50	0.000	18	2.39	1.25	0.00	0.00	10.02	640.39	640.39	
0+32.71	0+04.37	28.34	LAT B2-1B	0.20	0.90	0.18	0.24	10.18	100	7.88	3.50	0.004	18	4.13	0.75	0.19	0.00	10.18	640.20	640.16	
0+04.37	0+00.00	4.37					0.24	10.28	100	7.88	3.50	0.320	18	19.02	0.35	0.10	0.00	10.28	640.06	637.69	
STORM LAT B2-1B																					
0+39.45	0+00.00	39.45	B4	0.20	0.90	0.18	0.18	10.02	100	7.88	3.00	0.002	18	3.98	1.25	0.22	0.00	10.02	640.41	640.39	
STORM LAT B2-2																					
0+18.49	0+00.00	18.49	B2	0.17	0.90	0.15	0.15	10.02	100	7.88	1.14	0.002	18	3.85	1.25	0.18	0.00	10.02	638.28	638.35	
STORM LAT C1-1																					
0+24.06	0+04.83	19.23	C3	2.53	0.90	2.28	2.28	12.00	100	7.88	8.78	0.061	18	13.44	1.25	0.71	0.00	12.00	636.26	634.92	
0+04.83	0+00.00	4.83					2.28	12.03	100	7.88	8.78	0.073	18	14.65	0.35	0.20	0.00	12.03	634.72	634.49	
STORM LAT C1-2																					
0+69.58	0+27.09	42.49	C1	0.25	0.90	0.23	0.23	12.00	100	7.88	1.62	0.004	24	3.27	1.25	0.19	0.00	12.00	634.60	634.51	
0+27.09	0+00.00	27.09					0.23	12.22	100	7.88	1.62	0.001	24	3.27	1.00	0.00	0.00	12.22	634.51	634.51	
STORM LAT C1-3																					
0+22.44	0+15.37	7.07					0.00	0.00	100	7.88	0.00	0.000	24	0.00	0.35	0.00	∞	0.00	633.84	633.84	NO FLOW IN INTERIM
0+15.37	0+00.00	15.37					0.00	0.00	100	7.88	0.00	0.000	24	0.00	0.35	0.00	∞	0.00	633.84	633.84	NO FLOW IN INTERIM

KFM
ENGINEERING & DESIGN
3501 OLYMPUS BLVD, SUITE 100
DALLAS, TEXAS 75019
PHONE: (817) 416-4536
WWW.KFM-LLC.COM
TBPE #: F-20821

DATE: | DESCRIPTION: | DELTA: | DATE: | DESCRIPTION: | ISSUE:

CLIENT
121 SPRING CREEK, LLC

PROJECT
FRISCO 45 INFRASTRUCTURE

SHEET TITLE
DRAINAGE CALCULATIONS

PRELIMINARY
NOT FOR CONSTRUCTION
KFM ENGINEERING & DESIGN
ENGINEER: Joshua A. Millsap
P.E. No.: 100118 DATE: 7/9/21

PROJECT NUMBER:
010021003

DRAWN BY: GW/LL | DESIGNED BY: JDB/TT | CHECKED BY: JAM

DATE:
06/25/21

SHEET:
C4.23

PROPOSED INLET				Design Storm Frequency (year)	AREA RUNOFF Q = CIA					Carry-Over from Upstream Inlet (cfs)	Total Gutter Flow (cfs)	Gutter Slope (ft/100ft)	REQUIRED LENGTH		Provided Length (ft)	Carry-Over to Downstream Inlet (cfs)
No.	Type	Contributing Drainage Area(s)	Upstream Inlet		Tc (min)	I (in/hr)	C	A (Ac)	Q (cfs)				On-Grade "L_T" (ft)	In Sag "L" (ft)		
1	2	3	4	5	6	7	8	9	10	11	12	13	14	15	16	17
LINE A2	Sag	A22		100	10	8.74	0.3	1.49	3.91	0.00	3.91	0.005	-	1.49	10	0.00
LINE B1	On-Grade	B6		100	10	8.74	0.9	0.25	1.97	0.00	1.97	0.005	6.07	-	10	0.00
LINE B2	On-Grade	B3		100	10	8.74	0.9	0.71	5.58	0.00	5.58	0.005	9.41	-	10	0.00
LINE C1	Sag	C2	LAT A1-13C	100	10	8.74	0.9	0.43	3.38	0.18	3.56	0.005	-	1.36	10	0.00
LAT A1-1	On-Grade	A2		100	10	8.74	0.9	0.27	2.12	0.00	2.12	0.005	6.27	-	10	0.00
LAT A1-2A	On-Grade	A3		100	10	8.74	0.9	0.13	1.02	0.00	1.02	0.005	4.61	-	10	0.00
LAT A1-2B	On-Grade	A4		100	10	8.74	0.7	2.87	17.56	0.00	17.56	0.005	15.22	-	15	0.01
LAT A1-4A	On-Grade	A8		100	10	8.74	0.9	0.32	2.52	0.00	2.52	0.005	6.73	-	10	0.00
LAT A1-4B	On-Grade	A9		100	10	8.74	0.9	0.33	2.60	0.00	2.60	0.005	6.82	-	10	0.00
LAT A1-5	On-Grade	A5		100	10	8.74	0.9	0.11	0.87	0.00	0.87	0.005	4.30	-	10	0.00
LAT A1-6	On-Grade	A6	LAT A1-7	100	10	8.74	0.9	0.08	0.63	0.00	0.63	0.005	3.76	-	10	0.00
LAT A1-7	Sag	A10		100	10	8.74	0.9	2.85	22.42	0.00	22.42	0.005	-	8.56	10	0.00
LAT A1-11	Sag	A12		100	10	8.74	0.35	2.6	7.95	0.00	7.95	0.005	-	3.04	10	0.00
LAT A1-13A	On-Grade	A25	LAT A1-15	100	10	8.74	0.9	0.26	2.05	0.00	2.05	0.005	6.17	-	10	0.00
LAT A1-13B	Sag	A14		100	10	8.74	0.9	2.52	19.82	0.00	19.82	0.005	-	7.56	10	0.00
LAT A1-13C	On-Grade	A26		100	10	8.74	0.9	1.1	8.65	0.00	8.65	0.005	11.31	-	10	0.18
LAT A1-14	On-Grade	A14		100	10	8.74	0.3	2.52	6.61	0.00	6.61	0.005	10.10	-	10	0.00
LAT A1-15	On-Grade	A13		100	10	8.74	0.9	0.18	1.42	0.00	1.42	0.005	5.29	-	10	0.00
LAT A1-16	On-Grade	A17	LAT A1-17	100	10	8.74	0.9	0.19	1.49	0.00	1.49	0.005	5.41	-	10	0.00
LAT A1-17	Sag	A18		100	10	8.74	0.9	1.41	11.09	0.00	11.09	0.005	-	4.23	10	0.00
LAT A1-18	On-Grade	A16		100	10	8.74	0.9	0.3	2.36	0.00	2.36	0.005	6.55	-	10	0.00
LAT A1-19	On-Grade	A15	LAT A1-14	100	10	8.74	0.9	0.3	2.36	0.00	2.36	0.005	6.55	-	10	0.00
LAT A1-23	Sag	A6		100	10	8.74	0.9	0.08	0.63	0.00	0.63	0.005	-	0.24	10	0.00
LAT A1-26	Sag	A26		100	10	8.74	0.9	1.1	8.65	0.00	8.65	0.005	-	3.30	10	0.00
LAT A2-1	Sag	A20		100	10	8.74	0.9	2.11	16.60	0.00	16.60	0.005	-	6.33	10	0.00
LAT A2-2	On-Grade	A19		100	10	8.74	0.9	0.48	3.78	0.00	3.78	0.005	7.98	-	10	0.00
LAT A2-4	On-Grade	A21	LINE A2	100	10	8.74	0.9	0.21	1.65	0.00	1.65	0.005	5.64	-	10	0.00
LAT A2-5	On-Grade	A23	LAT A2-7	100	10	8.74	0.9	0.13	1.02	0.00	1.02	0.005	4.61	-	10	0.00
LAT A2-6	Sag	A11		100	10	8.74	0.9	2.54	19.98	0.00	19.98	0.005	-	7.62	10	0.00
LAT A2-7	On-Grade	A24		100	10	8.74	0.9	0.26	2.05	0.00	2.05	0.005	6.17	-	10	0.00
LAT B1-1	Sag	B8		100	10	8.74	0.9	2.66	20.92	0.00	20.92	0.005	-	7.99	10	0.00
LAT B1-2	On-Grade	B7		100	10	8.74	0.9	1.83	14.39	0.00	14.39	0.005	14.00	-	15	0.00
LAT B2-1A	On-Grade	B5		100	10	8.74	0.9	0.07	0.55	0.00	0.55	0.005	3.56	-	10	0.00
LAT B1-2B	On-Grade	B4	LAT B1-2	100	10	8.74	0.9	0.2	1.57	0.00	1.57	0.005	5.53	-	10	0.00
LAT B2-2	On-Grade	B2		100	10	8.74	0.9	0.17	1.34	0.00	1.34	0.005	5.16	-	10	0.00
LAT C1-1	Sag	C3		100	10	8.74	0.9	2.53	19.90	0.00	19.90	0.005	-	7.59	10	0.00
LAT C1-2	On-Grade	C1		100	10	8.74	0.9	0.25	1.97	0.00	1.97	0.005	6.07	-	10	0.00

OUTFALL	Q (CFS)	V (fps)	DIAMETER D_o (ft)	TW < 0.5 D_o	d_{50} (ft)	L_a (ft)	W (ft)
STM A1	192.2	15.54	4	YES	1.40	40.00	44.00
STM B1	37.5	12.06	2	YES	0.60	18.00	20.00
STM B2	8.2	5.83	1.5	YES	0.30	10.00	11.50
S5M B3	4.5	4.59	1.5	YES	0.25	10.00	11.50
POND B OUTFALL	37.9	12.09	3.5	NO	0.25	15.00	9.50

KFM ENGINEERING & DESIGN
3501 OLYMPUS BLVD, SUITE 100
DALLAS, TEXAS 75019
PHONE: (817) 416-4536
WWW.KFM-LLC.COM
TBPE #: F-20821

DATE: DESCRIPTION: DELTA:

DATE: DESCRIPTION: ISSUE:

CLIENT
121 SPRING CREEK, LLC

PROJECT
FRISCO 45 INFRASTRUCTURE

SHEET TITLE
DRAINAGE CALCULATIONS

PRELIMINARY
NOT FOR CONSTRUCTION
KFM ENGINEERING & DESIGN
ENGINEER: Joshua A. Millsap
P.E. No.: 100118 DATE: 7/9/21

PROJECT NUMBER: 010021003
DRAWN BY: GW/LL
DESIGNED BY: JDB/TT
CHECKED BY: JAM
DATE: 06/25/21
SHEET:

C4.24

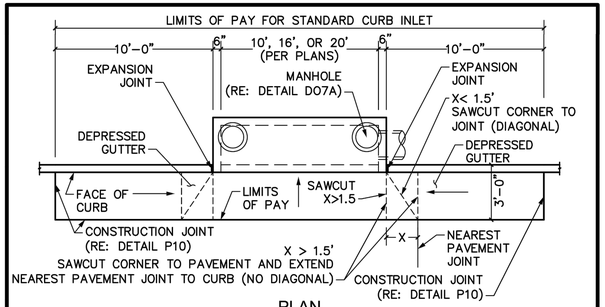

PLAN

NOTES:

1. TOP OF INLET TO SLOPE 2% TOWARDS STREET OR PER PLAN.
2. CENTER SUPPORT BEAM REQUIRED FOR 16' AND 20' STANDARD CURB INLETS.
3. ADDITIONAL REINFORCING STEEL TO BE PLACED AROUND MANHOLE OPENING.

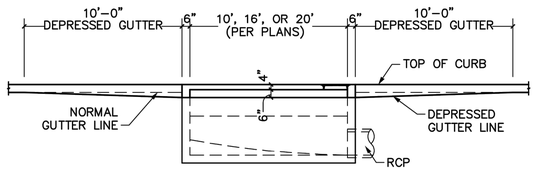

PROFILE

NOTES:

1. MANHOLE TO BE PLACED AT LOW END OF INLET. TWO MANHOLES ARE REQUIRED ON 16' AND 20' INLETS ONLY, ONE ON EACH END.
2. PIPE MAY BE PLACED IN ANY WALL, BUT SHALL NOT ENTER ANY CORNER OR BOTTOM.

FRISCO PROGRESS IN MOTION	STANDARD CONSTRUCTION DETAIL **STANDARD CURB INLET** **SHEET 1 OF 2**	SCALE: 1"=5' REVISED: AUG 2020 D02

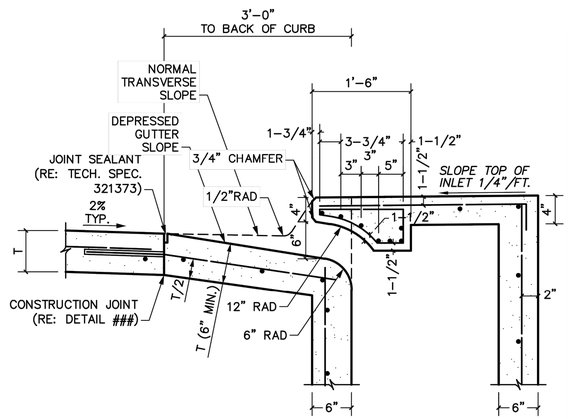

THROAT SECTION

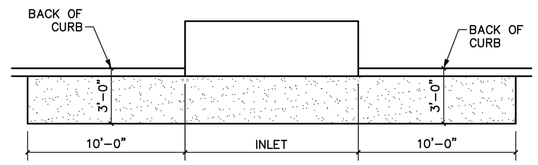

PAVEMENT BLOCKOUT

FRISCO PROGRESS IN MOTION	STANDARD CONSTRUCTION DETAIL **STANDARD CURB INLET** **SHEET 2 OF 2**	SCALE: 1"=1'-0" REVISED: AUG 2020 D03

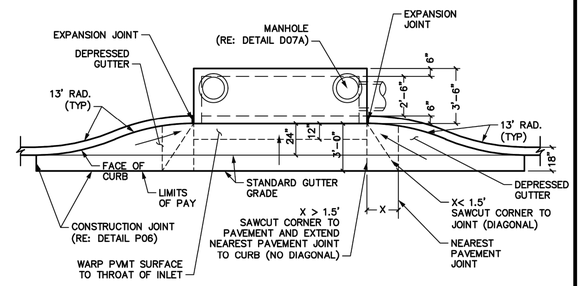

PLAN VIEW

NOTES:

1. TOP OF INLET TO SLOPE 2% TOWARDS STREET OR PER PLAN.
2. CENTER SUPPORT BEAM REQUIRED FOR 16' AND 20' STANDARD CURB INLETS.
3. ADDITIONAL REINFORCING STEEL TO BE PLACED AROUND MANHOLE OPENING.

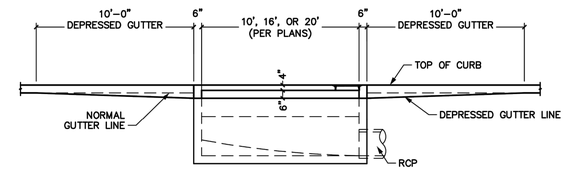

PROFILE

NOTES:

1. MANHOLE TO BE PLACED AT LOW END OF INLET. TWO MANHOLES ARE REQUIRED ON 16' AND 20' INLETS ONLY, ONE ON EACH END.
2. PIPE MAY BE PLACED IN ANY WALL, BUT SHALL NOT ENTER ANY CORNER OR BOTTOM.

FRISCO PROGRESS IN MOTION	STANDARD CONSTRUCTION DETAIL **RECESSED CURB INLET** **SHEET 1 OF 2**	SCALE: 1"=5' REVISED: AUG 2020 D04

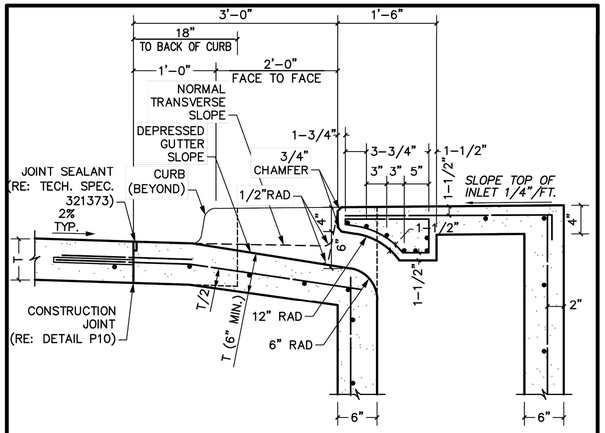

THROAT SECTION

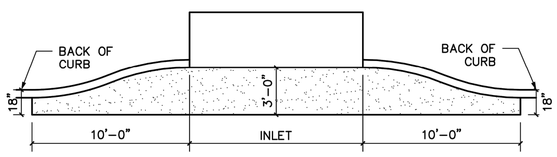

PAVEMENT BLOCKOUT

FRISCO PROGRESS IN MOTION	STANDARD CONSTRUCTION DETAIL **RECESSED CURB INLET** **SHEET 2 OF 2**	SCALE: 1"=1'-0" REVISED: AUG 2020 D05

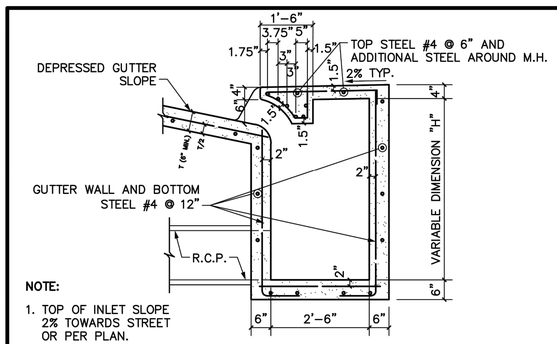

NOTE:

1. TOP OF INLET SLOPE 2% TOWARDS STREET OR PER PLAN.

INLET SECTION FOR RECESSED AND STANDARD INLETS

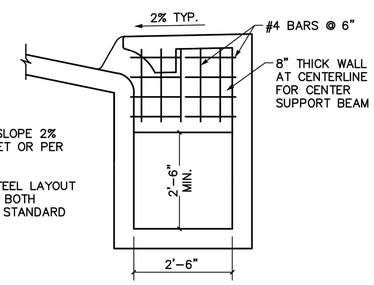

NOTES:

1. TOP OF INLET SLOPE 2% TOWARDS STREET OR PER PLAN.
2. REINFORCING STEEL LAYOUT APPLICABLE TO BOTH RECESSED AND STANDARD CURB INLETS.

CENTER SUPPORT BEAM FOR 15' & 20' RECESSED AND STANDARD INLETS

FRISCO PROGRESS IN MOTION	STANDARD CONSTRUCTION DETAIL **CENTER SUPPORT BEAM & INLET SECTION FOR RECESSED AND STANDARD INLETS**	SCALE: 1/2"=1'-0" REVISED: AUG 2020 D06

GENERAL NOTES:

1. ALL CONCRETE SHALL BE 4,000 PSI AND SULFATE RESISTANT.
2. ALL REINFORCING STEEL SHALL BE NEW BILLET STEEL CONFORMING TO ASTM A-615.
3. CHAMFER ALL EXPOSED CORNERS 3/4" EXCEPT WHERE OTHERWISE NOTED.
4. DIMENSIONS RELATING TO REINFORCING STEEL ARE TO CENTERS OF BARS.
5. FIELD CUT AND BEND BARS AS NECESSARY TO ACCOMMODATE STORM SEWER PIPE.
6. ALL REINFORCING STEEL SHALL HAVE A MINIMUM COVER OF 2".
7. RECESSED CURB INLETS SHALL BE REQUIRED ON ALL A THROUGH D STREETS. STANDARD INLETS WILL BE PERMITTED ON E THROUGH G STREETS.
8. STANDARD CURB INLET SIZES ARE 10', 15', OR 20'. NO OTHER SIZES WILL BE ALLOWED WITHOUT APPROVAL FROM DIRECTOR OF ENGINEERING SERVICES.

PRIVATE DEVELOPMENT ALTERNATIVE NOTE:

1. THESE NOTES ARE SUPPLEMENTAL TO THE GENERAL NOTES AND APPLY ONLY WHEN PREFABRICATED BOXES ARE CALLED OUT ON THE PLANS AND ALLOWED BY ENGINEERING SERVICES.
2. ROCK FOUNDATION SHALL BE USED DURING PREFABRICATED INLET BOX INSTALLATION. 6" FOR BACKFILL WITH FLOWABLE FILL TO FILL VOIDS OR COMPACT WITH SELECT SURPLUS EXCAVATION COMPACTED IN 8" LIFTS TO 95% STANDARD PROCTOR DENSITY.

FRISCO PROGRESS IN MOTION	STANDARD CONSTRUCTION DETAIL **STORM SEWER INLETS & MANHOLE GENERAL NOTES**	SCALE: N.T.S. REVISED: AUG 2020 D07

KFM ENGINEERING & DESIGN
3501 OLYMPUS BLVD, SUITE 100
DALLAS, TEXAS 75019
PHONE: (817) 416-4536
WWW.KFM-LLC.COM
TBPE #: F-20821

ISSUE:	DESCRIPTION:	DATE:

DELTA:	DESCRIPTION:	DATE:

CLIENT
121 SPRING CREEK, LLC

PROJECT
FRISCO 45 INFRASTRUCTURE

SHEET TITLE
DRAINAGE DETAILS

PRELIMINARY
NOT FOR CONSTRUCTION
KFM ENGINEERING & DESIGN
ENGINEER: Joshua A. Millsap
P.E. No.: 100118 DATE: 7/9/21

PROJECT NUMBER: 010021003

DRAWN BY:	DESIGNED BY:	CHECKED BY:
GW/LL	JDB/TT	JAM

DATE: 06/25/21

SHEET:

C4.90

K:\Projects\010021003\cadsheet\010021003_dn01-thurton-8-30-2021 8:48 AM

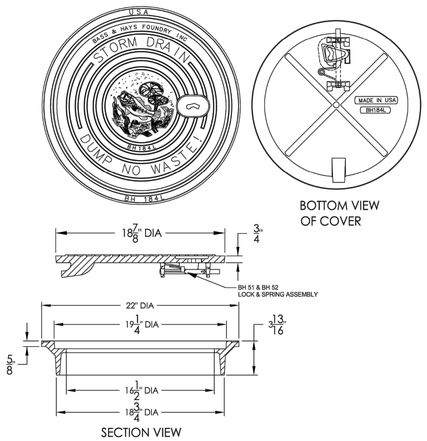

NOTE:

1. MANHOLE COVER AND FRAME SHALL BE SELECTED FROM THE APPROVED MATERIALS LIST.
2. STORMWATER QUALITY DEVICES SHALL HAVE MANUFACTURER'S MANHOLE LID.

FRISCO PROGRESS IN MOTION.	STANDARD CONSTRUCTION DETAIL **STORM SEWER CURB INLET LID DETAIL**	SCALE: N.T.S. REVISED: AUG 2020 D08

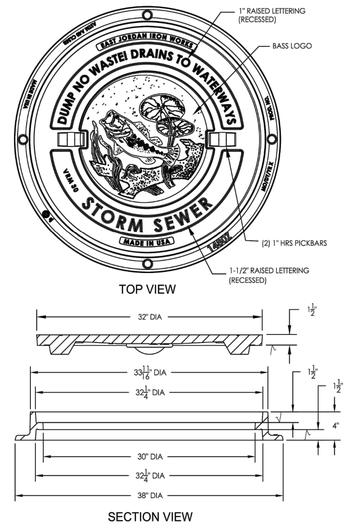

NOTES:

1. MANHOLE COVER AND FRAME SHALL BE SELECTED FROM THE APPROVED MATERIALS LIST.
2. STORMWATER QUALITY DEVICES SHALL HAVE MANUFACTURER'S MANHOLE LID.

FRISCO PROGRESS IN MOTION.	STANDARD CONSTRUCTION DETAIL **STORM SEWER MANHOLE LID DETAIL**	SCALE: N.T.S. REVISED: AUG 2020 D09

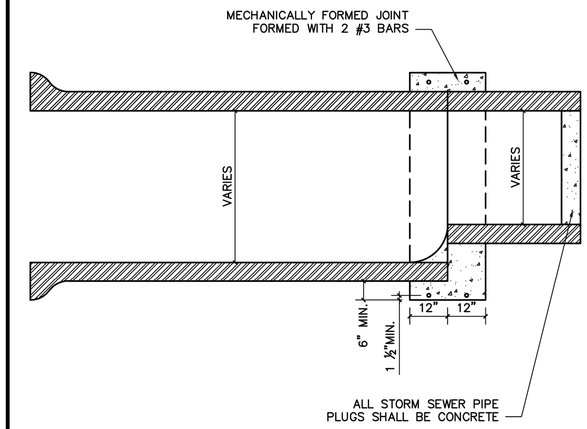

FRISCO PROGRESS IN MOTION.	STANDARD CONSTRUCTION DETAIL **CONCRETE COLLAR FOR PIPE CONNECTIONS**	SCALE: N.T.S. REVISED: AUG 2020 D12

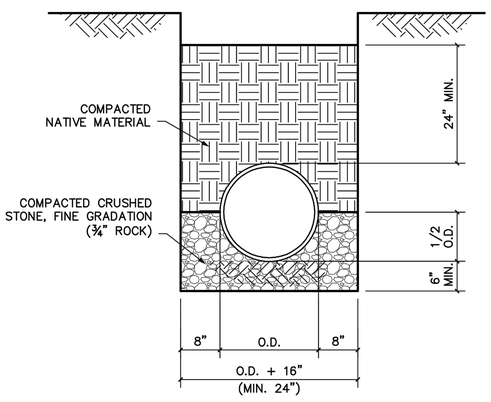

CLASS "B"

NOTES:

1. UTILIZE CLASS "B" EMBEDMENT FOR RCP STORM DRAIN INSTALLATIONS.
2. REFER TO TECHNICAL SPECIFICATION 330510 TRENCHING, BACKFILLING AND COMPACTION.
3. BEDDING DEPTH MEASURED FROM OUTSIDE THE PIPE BELL.
4. FINAL BACKFILL MOISTURE TREATED TO 3% ABOVE OPTIMUM AT 95% STANDARD PROCTOR FOR EAGLE FORD AND 0 ±4% FOR AUSTIN CHALK.

FRISCO PROGRESS IN MOTION.	STANDARD CONSTRUCTION DETAIL **EMBEDMENT "B" (STORM)**	SCALE: 3/4"=1'-0" REVISED: AUG 2020 U01

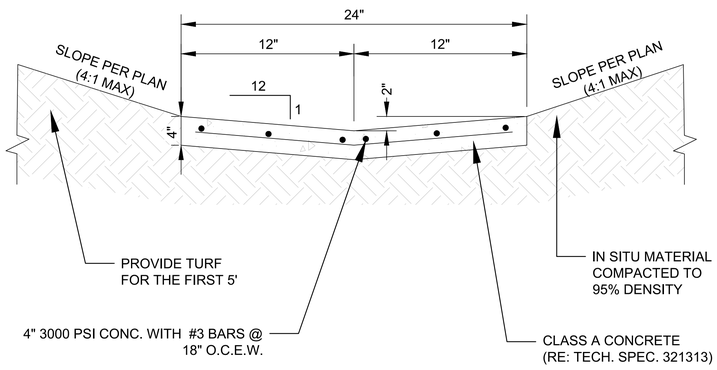

NOTES:

1. FIRST FIVE FEET OF SLOPE SHALL BE STABILIZED WITH PERMANENT TURF REINFORCEMENT MAT OR EQUIVALENT.
2. 1 / 2" DOWLED EXPANSION JOINT EVERY 30'
3. EXPANSION JOINTS SHALL BE SEALED (RE: TECH SPEC 321373)

STANDARD CONSTRUCTION DETAIL
FLUME

iSWM™ Technical Manual — Construction Controls

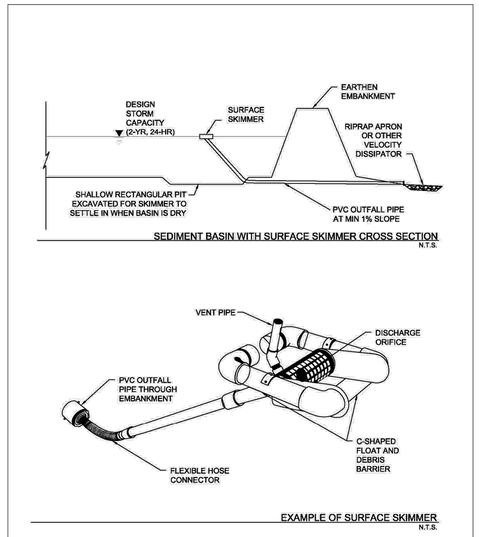

Figure 3.21 Schematics of Sediment Basin with Surface Skimmer
(Source: J.W. Faircloth & Son, Inc.)

Sediment Basin — CC-128
April 2010, Revised 9/2014

KFM ENGINEERING & DESIGN
3501 OLYMPUS BLVD, SUITE 100
DALLAS, TEXAS 75019
PHONE: (817) 416-4536
WWW.KFM-LLC.COM
TBPE #: F-20821

ISSUE:	DESCRIPTION:	DATE:

DELTA:	DESCRIPTION:	DATE:

CLIENT: 121 SPRING CREEK, LLC

PROJECT: FRISCO 45 INFRASTRUCTURE

SHEET TITLE: DRAINAGE DETAILS

PRELIMINARY
NOT FOR CONSTRUCTION
KFM ENGINEERING & DESIGN
ENGINEER: Joshua A. Millsap
P.E. No.: 100118 DATE: 7/9/21

PROJECT NUMBER: 010021003
DRAWN BY: GW/LL — DESIGNED BY: JDB/TT — CHECKED BY: JAM
DATE: 06/25/21
SHEET:

C4.91

K:\Projects\010021003\cadsheet\010021003_dn01-thurton-8-30/2021 8:48 AM

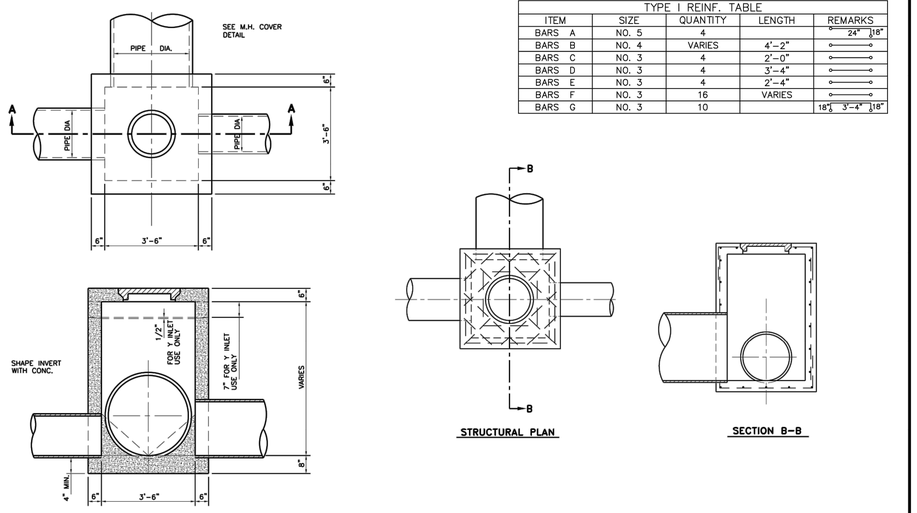

TYPE I REINF. TABLE				
ITEM	SIZE	QUANTITY	LENGTH	REMARKS
BARS A	NO. 5	4		24" 18"
BARS B	NO. 4	VARIES	4'-2"	
BARS C	NO. 3	4	2'-0"	
BARS D	NO. 3	4	3'-4"	
BARS E	NO. 3	4	2'-4"	
BARS F	NO. 3	16	VARIES	
BARS G	NO. 3	10		18" 3'-4" 18"

FRISCO PROGRESS IN MOTION

STANDARD CONSTRUCTION DETAIL

TYPE I JUNCTION BOX

SCALE: N.T.S.
REVISED: AUG 2020
D13

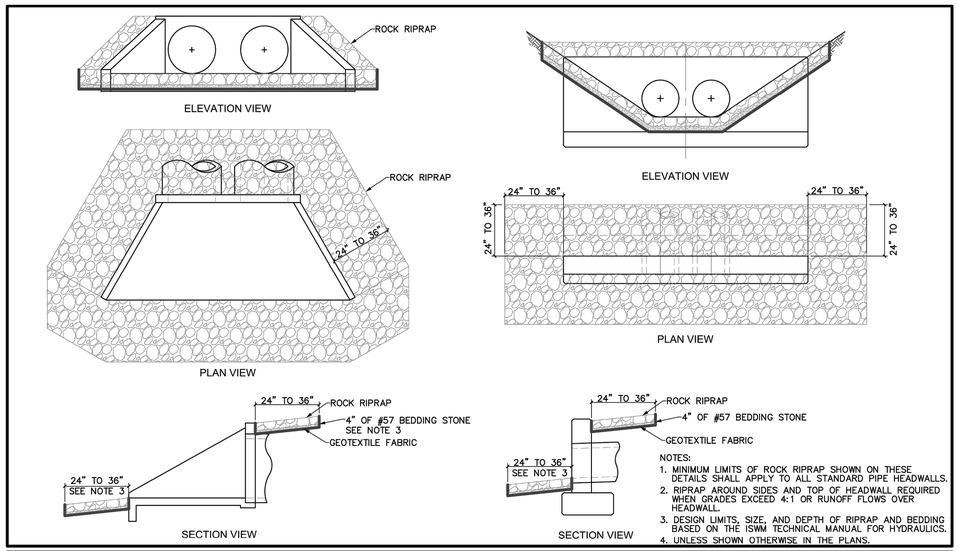

NOTES:
1. MINIMUM LIMITS OF ROCK RIPRAP SHOWN ON THESE DETAILS SHALL APPLY TO ALL STANDARD PIPE HEADWALLS.
2. RIPRAP AROUND SIDES AND TOP OF HEADWALL REQUIRED WHEN GRADES EXCEED 4:1 OR RUNOFF FLOWS OVER HEADWALL.
3. DESIGN LIMITS, SIZE, AND DEPTH OF RIPRAP AND BEDDING BASED ON THE ISWM TECHNICAL MANUAL FOR HYDRAULICS.
4. UNLESS SHOWN OTHERWISE IN THE PLANS.

FRISCO PROGRESS IN MOTION

STANDARD CONSTRUCTION DETAIL

RIPRAP AROUND HEADWALLS

SCALE: N.T.S.
REVISED: AUG 2020
D17

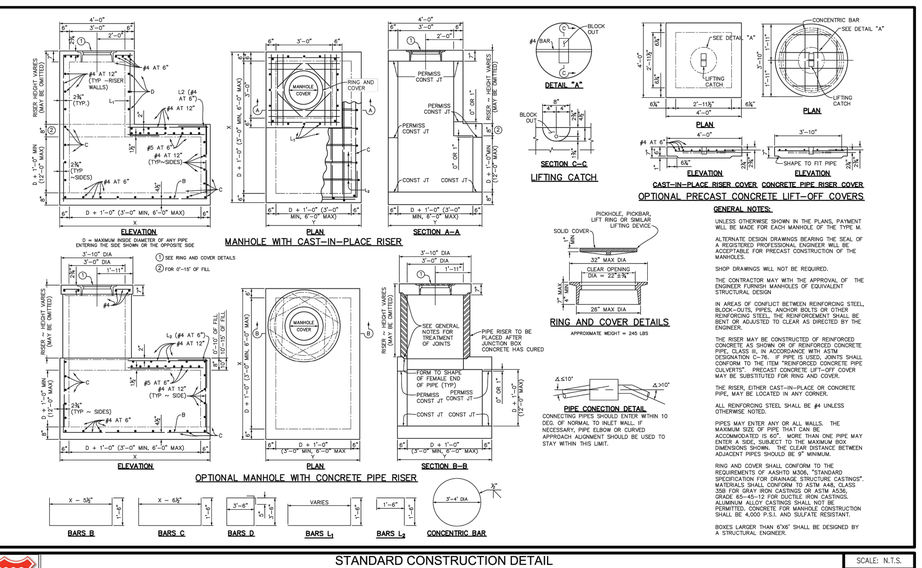

D = MAXIMUM INSIDE DIAMETER OF ANY PIPE ENTERING THE SIDE SHOWN OR THE OPPOSITE SIDE

③ SEE RING AND COVER DETAILS
② FOR 6'-15' OF FILL

GENERAL NOTES:

UNLESS OTHERWISE SHOWN IN THE PLANS, PAYMENT WILL BE MADE FOR EACH MANHOLE OF THE TYPE M.

ALTERNATE DESIGN DRAWINGS BEARING THE SEAL OF A REGISTERED PROFESSIONAL ENGINEER WILL BE ACCEPTABLE FOR PRECAST CONSTRUCTION OF THE MANHOLES.

SHOP DRAWINGS WILL NOT BE REQUIRED.

THE CONTRACTOR MAY WITH THE APPROVAL OF THE ENGINEER FURNISH MANHOLES OF EQUIVALENT STRUCTURAL DESIGN

IN AREAS OF CONFLICT BETWEEN REINFORCING STEEL, BLOCK-OUTS, PIPES, ANCHOR BOLTS OR OTHER REINFORCING STEEL, THE REINFORCEMENT SHALL BE BENT OR ADJUSTED TO CLEAR AS DIRECTED BY THE ENGINEER.

THE RISER MAY BE CONSTRUCTED OF REINFORCED CONCRETE AS SHOWN OR OF REINFORCED CONCRETE PIPE, CLASS III, IN ACCORDANCE WITH ASTM DESIGNATION C-76. IF PIPE IS USED, JOINTS SHALL CONFORM TO THE ITEM "REINFORCED CONCRETE PIPE" AND THE ITEM "CONCRETE PIPE RISER COVER" MAY BE SUBSTITUTED FOR RING AND COVER.

THE RISER, EITHER CAST-IN-PLACE OR CONCRETE PIPE, MAY BE LOCATED IN ANY CORNER.

ALL REINFORCING STEEL SHALL BE #4 UNLESS OTHERWISE NOTED.

PIPES MAY ENTER ANY OR ALL WALLS. THE MAXIMUM SIZE OF PIPE THAT CAN BE ACCOMMODATED IS 60". MORE THAN ONE PIPE MAY ENTER A SIDE, SUBJECT TO THE MAXIMUM BOX DIMENSIONS SHOWN. THE CLEAR DISTANCE BETWEEN ADJACENT PIPES SHOULD BE 8" MINIMUM.

RING AND COVER SHALL CONFORM TO THE REQUIREMENTS OF AASHTO M306, "STANDARD SPECIFICATION FOR DRAINAGE, STRUCTURE CASTINGS". MATERIALS SHALL CONFORM TO ASTM A48, CLASS 35B FOR GRAY IRON CASTINGS OR ASTM A536, GRADE 80-55-06 FOR DUCTILE IRON CASTINGS. ALUMINUM ALLOY CASTINGS SHALL NOT BE PERMITTED. CONCRETE FOR MANHOLE CONSTRUCTION SHALL BE 4,000 P.S.I. AND SULFATE RESISTANT.

BOXES LARGER THAN 6'X6' SHALL BE DESIGNED BY A STRUCTURAL ENGINEER.

FRISCO PROGRESS IN MOTION

STANDARD CONSTRUCTION DETAIL

TYPE II JUNCTION BOX

SCALE: N.T.S.
REVISED: AUG 2020
D14

KFM ENGINEERING & DESIGN
3501 OLYMPUS BLVD, SUITE 100
DALLAS, TEXAS 75019
PHONE: (817) 416-4536
WWW.KFM-LLC.COM
TBPE #: F-20821

ISSUE:	DESCRIPTION:	DATE:	DELTA:	DESCRIPTION:	DATE:

CLIENT
121 SPRING CREEK, LLC

PROJECT
FRISCO 45 INFRASTRUCTURE

SHEET TITLE
DRAINAGE DETAILS

PRELIMINARY
NOT FOR CONSTRUCTION
KFM ENGINEERING & DESIGN
ENGINEER: Joshua A Millsap
P.E. No.: 100118 DATE: 7/9/21

PROJECT NUMBER: 010021003

DRAWN BY:	DESIGNED BY:	CHECKED BY:
GW/LL	JDB/TT	JAM

DATE: 06/25/21

SHEET:

C4.92

K:\Projects\010021003\cadsheet\010021003_dn01-tiurtion-8-30\2021 8:46 AM

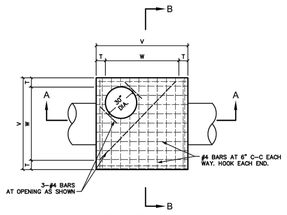

PLAN OF TOP SLAB

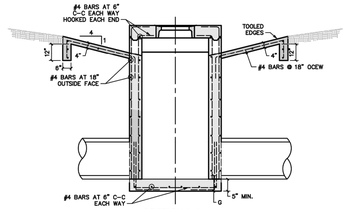

SECTION A-A

INLET SIZE	T	W	V	E	F	G	H
2' SQUARE	7"	2'-0"	2'-0"	6"	9"	8" MIN.	8"
3' SQUARE	7"	3'-0"	4'-0"	6"	9"	8" MIN.	8"
4' SQUARE	8"	4'-0"	4'-0"	6"	9"	8"	1'-3"

CORNER DETAIL
PLAN VIEW

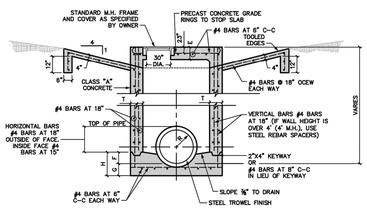

SECTION B-B

NOTES:

1. MATERIAL AND WORKMANSHIP SHALL CONFORM WITH THE REQUIREMENTS OF NCTCOG STANDARD SPECIFICATIONS FOR STANDARD CONCRETE MANHOLES. MINIMUM CLASS "A" CONCRETE, 4000 PSI, AND SULFATE RESISTANT.
2. LAYERS OF REINFORCING STEEL NEAREST THE INTERIOR AND EXTERIOR SURFACES SHALL HAVE A COVER OF 2" TO THE CENTER OF BARS, UNLESS OTHERWISE NOTED.
3. DEPTH OF DROP INLET FROM FINISHED GRADE TO FLOW LINE OF INLET IS VARIABLE. APPROXIMATE DEPTH WILL BE SHOWN ON PLANS AT LOCATION OF INLET.
4. ALL STANDARD WYE INLETS SHALL HAVE ONE OPENING ON EACH SIDE UNLESS OTHERWISE SHOWN ON PLANS.
5. APRON REQUIRED UNLESS USED IN STORMWATER QUALITY DEVICE.
6. USE CURB INLET LID FOR WYE INLETS 3' AND SMALLER AND MANHOLE LID FOR WYE INLETS 4' AND LARGER

FRISCO PROGRESS IN MOTION

STANDARD CONSTRUCTION DETAIL

2', 3' AND 4' WYE INLETS

SCALE: N.T.S.
REVISED: AUG 2020
D10

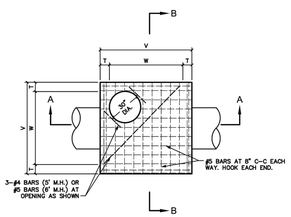

PLAN OF TOP SLAB

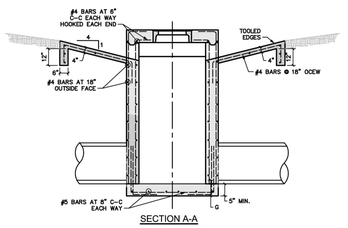

SECTION A-A

INLET SIZE	T	W	V	E	F	G	H
5' SQUARE	8"	5'-0"	5'-0"	6"	12"	8"	1'-8"
6' SQUARE	9"	6'-0"	6'-0"	9"	18"	10"	2'-2"

CORNER DETAIL
PLAN VIEW

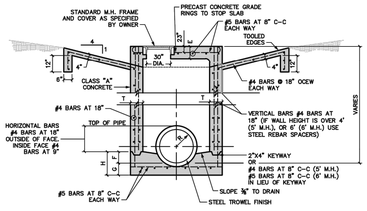

SECTION B-B

NOTES:

1. MATERIAL AND WORKMANSHIP SHALL CONFORM WITH THE REQUIREMENTS OF NCTCOG STANDARD SPECIFICATIONS FOR STANDARD CONCRETE MANHOLES. MINIMUM CLASS "A" CONCRETE, 4000 PSI, AND SULFATE RESISTANT
2. LAYERS OF REINFORCING STEEL NEAREST THE INTERIOR AND EXTERIOR SURFACES SHALL HAVE A COVER OF 2" TO THE CENTER OF BARS, UNLESS OTHERWISE NOTED.
3. DEPTH OF DROP INLET FROM FINISHED GRADE TO FLOW LINE OF INLET IS VARIABLE. APPROXIMATE DEPTH WILL BE SHOWN ON PLANS AT LOCATION OF INLET.
4. ALL STANDARD WYE INLETS SHALL HAVE ONE OPENING ON EACH SIDE UNLESS OTHERWISE SHOWN ON PLANS.
5. APRON REQUIRED UNLESS USED IN STORMWATER QUALITY DEVICE.
6. USE CURB INLET LID FOR WYE INLETS 3' AND SMALLER AND MANHOLE LID FOR WYE INLETS 4' AND LARGER

FRISCO PROGRESS IN MOTION

STANDARD CONSTRUCTION DETAIL

5' & 6' WYE INLETS

SCALE: N.T.S.
REVISED: AUG 2020
D11

KFM ENGINEERING & DESIGN
3501 OLYMPUS BLVD, SUITE 100
DALLAS, TEXAS 75019
PHONE: (817) 416-4536
WWW.KFM-LLC.COM
TBPE #: F-20821

ISSUE:	DESCRIPTION:	DATE:

DELTA:	DESCRIPTION:	DATE:

CLIENT
121 SPRING CREEK, LLC

PROJECT
FRISCO 45 INFRASTRUCTURE

SHEET TITLE
DRAINAGE DETAILS

PRELIMINARY
NOT FOR CONSTRUCTION
KFM ENGINEERING & DESIGN
ENGINEER: Joshua A. Millsap
P.E. No.: 100118 DATE: 7/9/21

PROJECT NUMBER:
010021003

DRAWN BY: GW/LL
DESIGNED BY: JDB/TT
CHECKED BY: JAM

DATE:
06/25/21

SHEET:
C4.93

K:\Projects\010021003\cad\sheet\010021003_dwg01-tburton-8-30/2021 8:46 AM